इंटरनेट मानक

Disclosure to Promote the Right To Information

Whereas the Parliament of India has set out to provide a practical regime of right to information for citizens to secure access to information under the control of public authorities, in order to promote transparency and accountability in the working of every public authority, and whereas the attached publication of the Bureau of Indian Standards is of particular interest to the public, particularly disadvantaged communities and those engaged in the pursuit of education and knowledge, the attached public safety standard is made available to promote the timely dissemination of this information in an accurate manner to the public.

"जानने का अधिकार, जीने का अधिकार"
Mazdoor Kisan Shakti Sangathan
"The Right to Information, The Right to Live"

"पुराने को छोड नये के तरफ"
Jawaharlal Nehru
"Step Out From the Old to the New"

IS 15448-3 (2004): Tools for Pressing - Guide Bushes, Part 3: Form B, Ball Cage Bushes, Plain, Type 1 [PGD 4: Metal Forming Machines]

"ज्ञान से एक नये भारत का निर्माण"
Satyanarayan Gangaram Pitroda
"Invent a New India Using Knowledge"

Act Number 22 of 2005
The Indian Parliament
RIGHT TO INFORMATION

Made Available By
Public.Resource.Org

"ज्ञान एक ऐसा खजाना है जो कभी चुराया नहीं जा सकता है"
Bhartṛhari—Nītiśatakam
"Knowledge is such a treasure which cannot be stolen"

BLANK PAGE

BRUTUM FULMEN

IGNORANTIA JURIS NON EXCUSAT

PROTECTED BY COPYRIGHT

भारतीय मानक

दाब औजार — गाइड बुश

भाग 3 फार्म बी, बाल केज़ बुश, सादा, टाइप 1

Indian Standard

TOOLS FOR PRESSING — GUIDE BUSHES

PART 3 FORM B, BALL CAGE BUSHES, PLAIN, TYPE 1

ICS 25.20.10

© BIS 2004

BUREAU OF INDIAN STANDARDS
MANAK BHAVAN, 9 BAHADUR SHAH ZAFAR MARG
NEW DELHI 110002

March 2004

Price Group 2

NATIONAL FOREWORD

This Indian Standard (Part 3) which is identical with ISO 9448-3 : 1991 'Tools for pressing — Guide bushes — Part 3 : Form B, ball cage bushes, plain, type 1' issued by the International Organization for Standardization (ISO) was adopted by the Bureau of Indian Standards on the recommendations of the Metal Forming Machines Sectional Committee and approval of the Basic and Production Engineering Division Council.

The text of the ISO Standard has been approved as suitable for publication as an Indian Standard without deviations. Certain conventions are, however, not identical to those used in Indian Standards. Attention is particularly drawn to the following:

a) Wherever the words 'International Standard' appear referring to this standard, they should be read as 'Indian Standard'.

b) Comma (,) has been used as a decimal marker in the International Standard while in Indian Standards, the current practice is to use a point (.) as the decimal marker.

For the purpose of deciding whether a particular requirement of this standard is complied with, the final value, observed or calculated, expressing the result of a test or analysis shall be rounded off in accordance with IS 2 : 1960 'Rules for rounding off numerical values (*revised*)'. The number of significant places retained in the rounded off value should be the same as that of the specified value in this standard.

Indian Standard

TOOLS FOR PRESSING — GUIDE BUSHES

PART 3 FORM B, BALL CAGE BUSHES, PLAIN, TYPE 1

1 Scope

This part of ISO 9448 specifies the main dimensions and tolerances, in millimetres, of guide bushes of form B, plain ball cage bushes, type 1, intended for use in press tools and to be mounted in the clamp plate by means of interference fit.

It gives guidance on the materials, and specifies the hardness and the designation of bushes in accordance with this part of ISO 9448.

2 Dimensions

See figure 1 and table 1.

Details not stated such as chamfers, radii, lubrication grooves, etc., are left to the manufacturer's discretion.

3 Material and corresponding hardness

The material is left to the manufacturer's discretion and the hardness shall be (63 ± 1) HRC.

4 Designation

A guide bush in accordance with this part of ISO 9448 shall be designated by

a) "Guide bush";

b) a reference to this part of ISO 9448;

c) its form;

d) its guiding diameter, D_1, in millimetres;

e) its length, l_1, in millimetres.

EXAMPLE

A guide bush of form B, plain ball cage bush, type 1, of guiding diameter D_1 = 12 mm and of length l_1 = 25 mm is designated as follows:

Guide bush ISO 9448-3 B - 12 × 25

Surface roughness values in micrometres

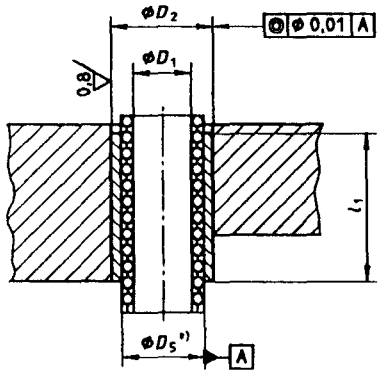

*) The manufacturer shall determine the internal diameter D_5 of the bush, using the tolerance M5. This diameter is intended to be lapped or ground to ensure the proper preloading of the balls between the pillar and the bush, as determined by the manufacturer. This lapping or grinding operation shall be carried out to give a surface roughness R_a = 0,05 µm and this diameter shall act as a reference diameter for the concentricity and perpendicularity tolerances.

Figure 1

Table 1

l_1		D_1						
		12	16	20	25	32	40	50
		D_2 n6[1]						
nom.	tol.	22	28	32	40	48	58	70
25	$^{-2,0}_{-2,5}$	X	X					
32		X	X	X				
40	$^{-3}_{-4}$	X	X	X	X			
50		X	X	X	X	X		
63			X	X	X	X	X	
80				X	X	X	X	X
100	$^{-3}_{-5}$					X	X	X
125							X	X
160								X

NOTES

1 X, standardized dimension.

2 To prevent an incorrect assembly of the upper and lower plates of the die set in relation to each other, the following values of D_1 are recommended: 11, 15, 19, 24, 30, 38 and 48.

1) Intended to fit in a hole having a tolerance H7. When the bushes are glued, the tolerance j6 is permitted.

Bureau of Indian Standards

BIS is a statutory institution established under the *Bureau of Indian Standards Act*, 1986 to promote harmonious development of the activities of standardization, marking and quality certification of goods and attending to connected matters in the country.

Copyright

BIS has the copyright of all its publications. No part of these publications may be reproduced in any form without the prior permission in writing of BIS. This does not preclude the free use, in the course of implementing the standard, of necessary details, such as symbols and sizes, type or grade designations. Enquiries relating to copyright be addressed to the Director (Publication), BIS.

Review of Indian Standards

Amendments are issued to standards as the need arises on the basis of comments. Standards are also reviewed periodically; a standard along with amendments is reaffirmed when such review indicates that no changes are needed; if the review indicates that changes are needed, it is taken up for revision. Users of Indian Standards should ascertain that they are in possession of the latest amendments or edition by referring to the latest issue of 'BIS Catalogue' and 'Standards: Monthly Additions'.

This Indian Standard has been developed from Doc: No. BP 04 (0379).

Amendments Issued Since Publication

Amend No.	Date of Issue	Text Affected

BUREAU OF INDIAN STANDARDS

Headquarters:

Manak Bhavan, 9 Bahadur Shah Zafar Marg, New Delhi 110002 — Telegrams: Manaksanstha (Common to all offices)
Telephones: 2323 0131, 2323 3375, 2323 9402

Regional Offices:		Telephone
Central	: Manak Bhavan, 9 Bahadur Shah Zafar Marg NEW DELHI 110002	2323 7617, 2323 3841
Eastern	: 1/14 C.I.T. Scheme VII M, V.I.P. Road, Kankurgachi KOLKATA 700054	2337 8499, 2337 8561, 2337 8626, 2337 9120
Northern	: SCO 335-336, Sector 34-A, CHANDIGARH 160022	60 3843, 60 9285
Southern	: C.I.T. Campus, IV Cross Road, CHENNAI 600113	2254 1216, 2254 1442, 2254 2519, 2254 2315
Western	: Manakalaya, E9 MIDC, Marol, Andheri (East) MUMBAI 400093	2832 9295, 2832 7858, 2832 7891, 2832 7892

Branches : AHMEDABAD. BANGALORE. BHOPAL. BHUBANESHWAR. COIMBATORE. FARIDABAD. GHAZIABAD. GUWAHATI. HYDERABAD. JAIPUR. KANPUR. LUCKNOW. NAGPUR. NALAGARH. PATNA. PUNE. RAJKOT. THIRUVANANTHAPURAM. VISAKHAPATNAM.

Printed at Simco Printing Press, Delhi